General Instructions

[redacted]

10 x 6 OVERLAP PENT

BEFORE YOU START PLEASE READ INSTRUCTIONS CAREFULLY

- Check the pack and make sure you have all the parts listed.
- When you are ready to start, make sure you have the right tools at hand (not supplied) including a Phillips screwdriver, Stanley knife, wood saw, step ladder and drill with 2mm bit.
- Ensure there is plenty of space and a clean dry area for assembly.

TIMBER

As with all natural materials, timber can be affected during various weather conditions. For the duration of heavy or extended periods of rain, swelling of the wood panels may occur. Warping of the wood may also occur during excessive dry spells due to an interior moisture loss. Unfortunately, these processes cannot be avoided but can be helped. It is suggested that the outdoor building is sprayed with water during extended periods of warm sunshine and sheltered as much as possible during rain or snow.

Once your garden building has been installed it will need to be treated as soon as possible and annually to prevent the timber from deteriorating and to waterproof it. This is required to maintain the anti-rot guarantee.

Dip Treated buildings - Require a preservative treatment to protect against rot and decay and a waterproof treatment to prevent water ingress

Pressure Treated buildings - Require a waterproof treatment to prevent water ingress

Log Cabins - Are supplied untreated and require a preservative and waterproofing treatment.

BUILDING A BASE

When thinking about where the building and base is going to be constructed:
Ensure that there will be access to all sides for maintenance work and annual treatment.

Ensure the base is level and is built on firm ground, to prevent distortion. Refer to diagrams for the base dimensions, The base should be slightly smaller than the external measurement of the building, i.e. The cladding should overlap the base, creating a run off for water. It is also recommended that the floor be at least 25mm above the surrounding ground level to avoid flooding.

TYPES OF BASE

- Concrete 75mm laid on top of 75mm hard-core.
- Slabs laid on 50mm of sharp sand.

Whilst all products manufactured are made to the highest standards of Safety and in the case of childrens products independently tested to EN71 level, we cannot accept responsibility for your safety whilst erecting or using this product.

Refer to the instructions pages for you specific product code

All building's should be erected by two adults

Winter = High Moisture = Expansion
Summer = Low Moisture = Contraction

2mm Drill bit

For ease of assembly, you **MUST** pilot drill all screw holes and ensure all screw heads are countersunk.

CAUTION
Every effort has been made during the manufacturing process to eliminate the prospect of splinters on rough surfaces of the timber. You are strongly advised to wear gloves when working with or handling rough sawn timber.

****Protim Aquatan T5 (621)****

Your building has been treated with **Aquatan**.

Aquatan is a water-based concentrate which is diluted with water, the building as been treated by the correct application of Aquatan solution and then allowed to dry.

Aquatan is a decorative finish to colour the wood, which is applied industrially to timber fence panels and garden buildings.

Aquatan *undiluted* contains: boric acid, sodium hydroxide 32% solution, aqueos mixture of sodium dioctyl sulphosuccinat and alcohols: 2, 4, 6-trichlorophenol.

For assistance please contact customer care on: 01636 880514

Mercia Garden Products Limited,
Sutton On Trent,
Newark,
Nottinghamshire,
NG23 6QN

www.merciagardenproducts.co.uk

Overall Dimensions:

Length = 1871mm
Width = 3028mm
Height = 2060mm

Base Dimensions:

Length = 1757mm
Width = 2974mm

Before assembly please make sure you have a suitable base ready to erect your building

MADE IN GREAT BRITAIN

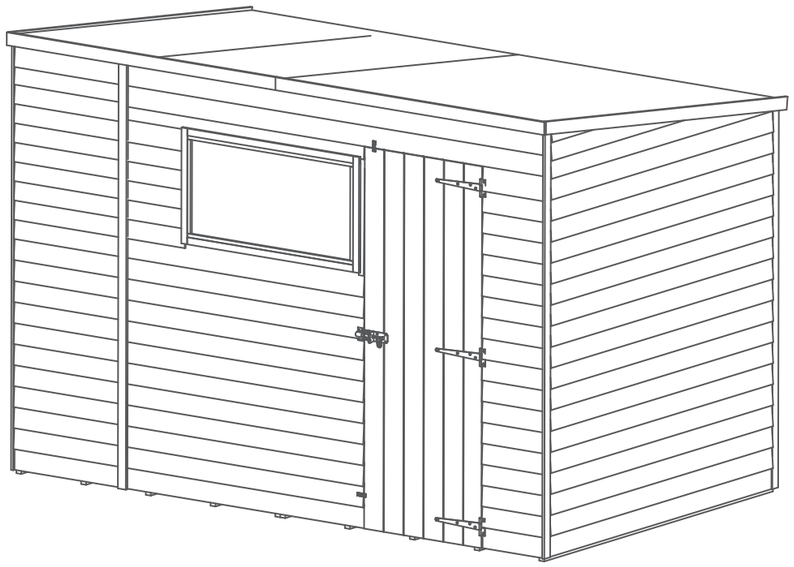

Nail Bag

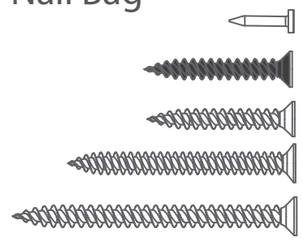

- Felt Tacks x 100
- 30mm Black Screw x 2
- 30mm Screw x 72
- 40mm Screw x 36
- 50mm Screw x 48

Building Content:

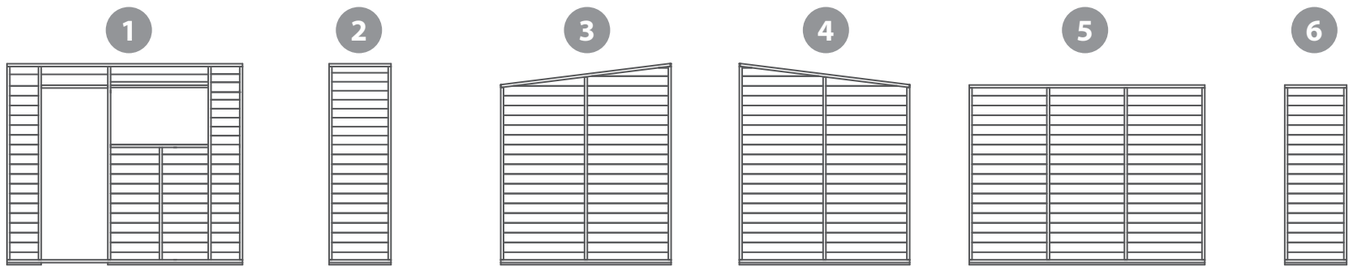

1. **Door Panel QTY 1**
   AI-01OVLPDSFW2013X2360-V2
2. **2ft Front Plain Panel QTY 1**
   AI-01OVLPPS2013X620-V1
3. **Right Gable QTY 1**
   AI-01OVLPPGPR1707X2015-V1
4. **Left Gable QTY 1**
   AI-01OVLPPGPL1707X2015-V1
5. **Plain Panel QTY 1**
   AI-01OVLPPS2360X1800-V1
6. **2ft Back Plain Panel QTY 1**
   AI-01OVLPPS1800X620-V1

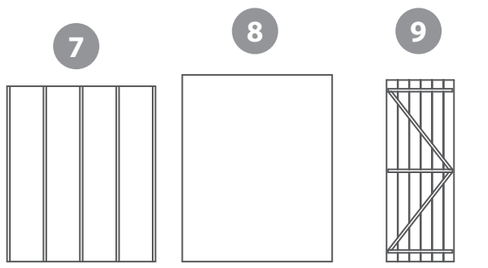

7. **Floor QTY 2**
   AI-01OVLPF1757X1487-V1
8. **Roof Sheet QTY 2**
   PI-03-0258
9. **Door QTY 1**
   AI-01MBDR1780X661-V1

10. **Ridge Bar - 27x44x1714mm QTY 3**
    F2744-1714mm
11. **Eaves Frame - 28x28x1502mm QTY 2**
    F2828-1502mm
12. **Door Block - 28x28x140mm QTY 1**
    F2828-140mm
13. **Side Fascia - 12x60x1873mm QTY 2**
    S1260-1873mm
14. **Front Fascia - 12x60x1514mm QTY 2**
    S1260-1514mm
15. **Front Cover Trims - 12x45x2020mm QTY 3**
    S1245-2020mm
16. **Back Cover Trims - 12x45x1800mm QTY 3**
    S1245-1800mm
17. **Door Strip - 12x28x1720mm QTY 2**
    S1228-1720mm

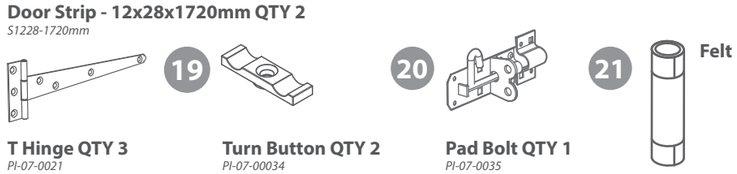

18. **T Hinge QTY 3**
    PI-07-0021
19. **Turn Button QTY 2**
    PI-07-00034
20. **Pad Bolt QTY 1**
    PI-07-0035
21. **Felt**

Pre Assembly

Remove transportation blocks from the bottom of each panel before beginning assembly. Each Panel should have two blocks.

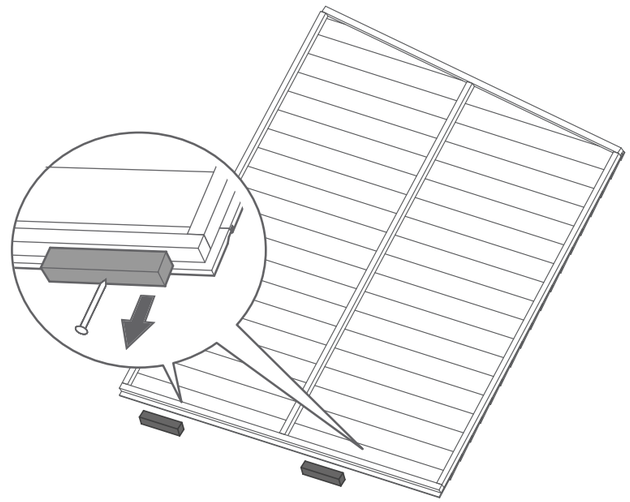

Fix the T Hinges onto the door and door frame as shown. Ensure that the screws go through the cladding and into the framing behind.

21x30mm screws

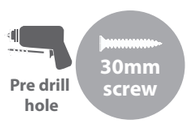

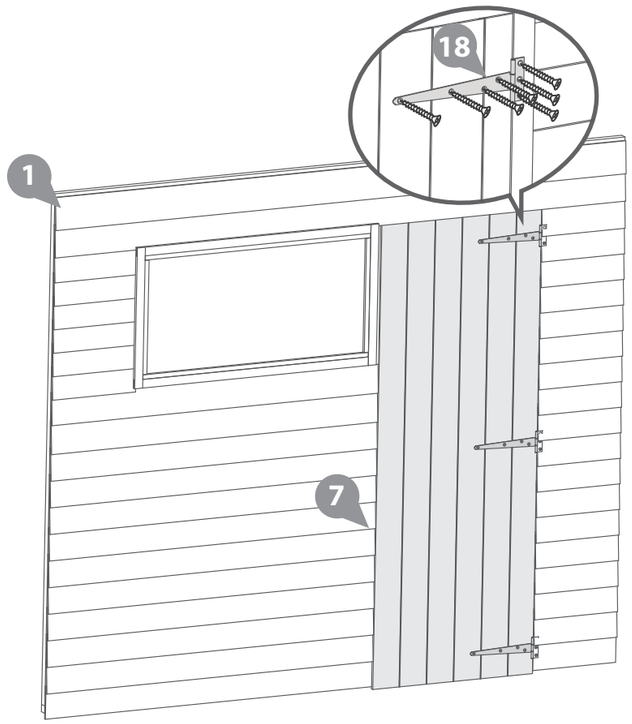

Step 1

Place floor on firm and level base, ensure base has suitable drainage free from areas where water can collect. (See front page on base requirements).

Attach the floors using 12 x 30mm screws

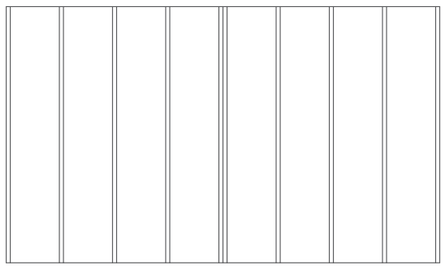

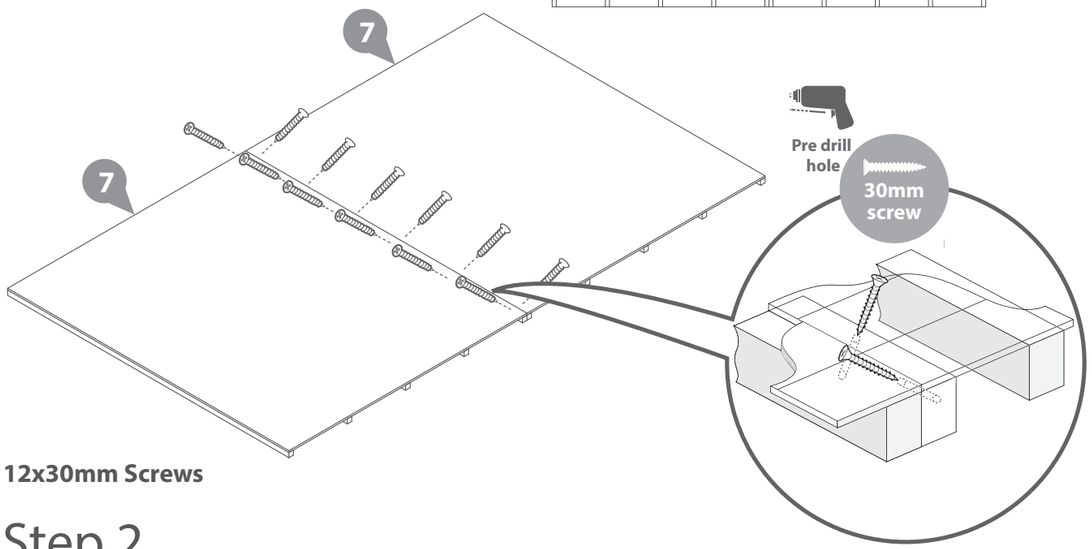

12x30mm Screws

Step 2

Fix the corners with 50mm screws as shown in diagram.

Do not secure the building to the floor until the roof is fitted.

Position the panels so there is equal spacing between the floor and cladding on all 4 sides

7x50mm Screws

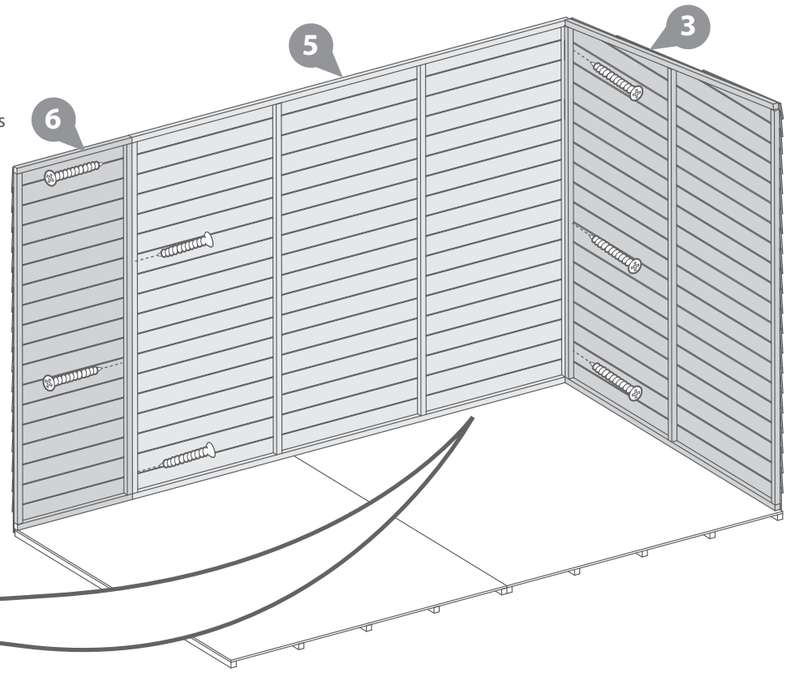

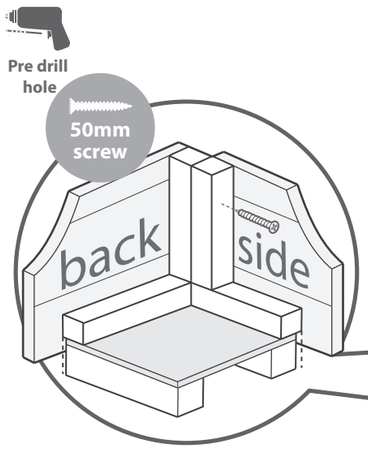

Step 3

Fix the corners with 50mm screws as shown in diagram.

13x50mm Screws

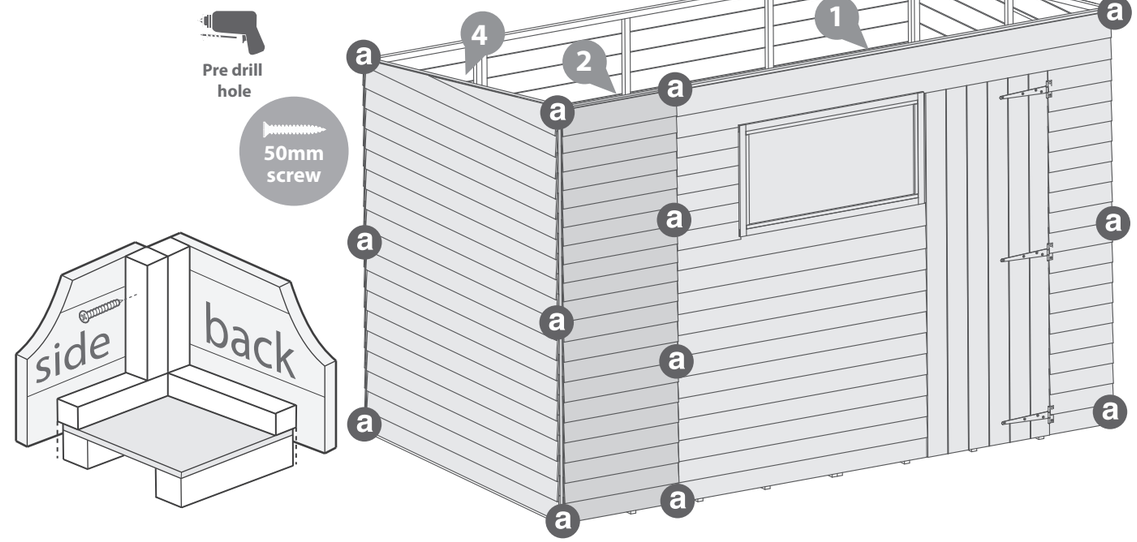

Step 4

Position a ridge bar between the front and back of the building centralised between the two gables. Fix in place using a 50mm screws screwing through the outside of the building into the ridge bar.

ENSURE SUPPORT BARS ARE MANUALLY SUPPORTED UNTIL FIXED AT BOTH ENDS

Fix another two ridge bars centralised between the ridge bar you have just fitted and the closest gable.

6x50mm Screws

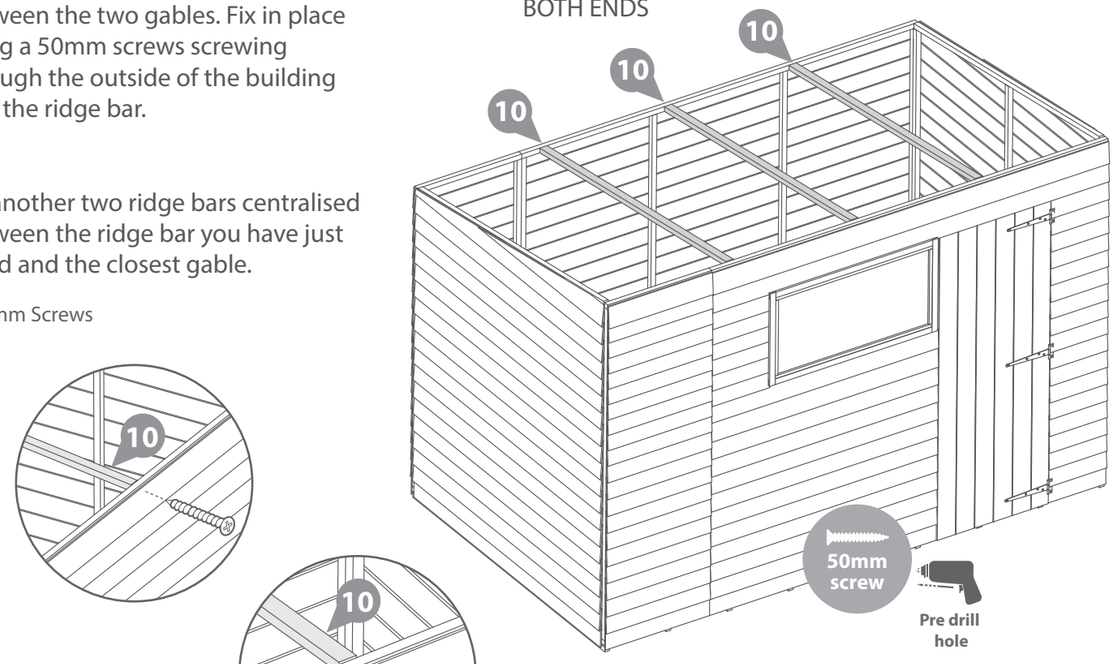

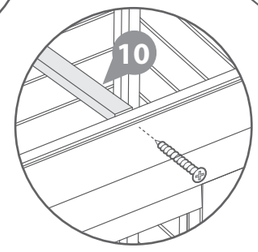

Step 5

a Fix the eaves frame to the roof sheet using 4x30mm screws for each sheet.
8x30mm Screws

b Place the two roof sheets onto the bulilding, centralise them over the roof frames and ake sure they finish flush with the front of the building. Fix in place with 40mm screws.

22x40mm Screws

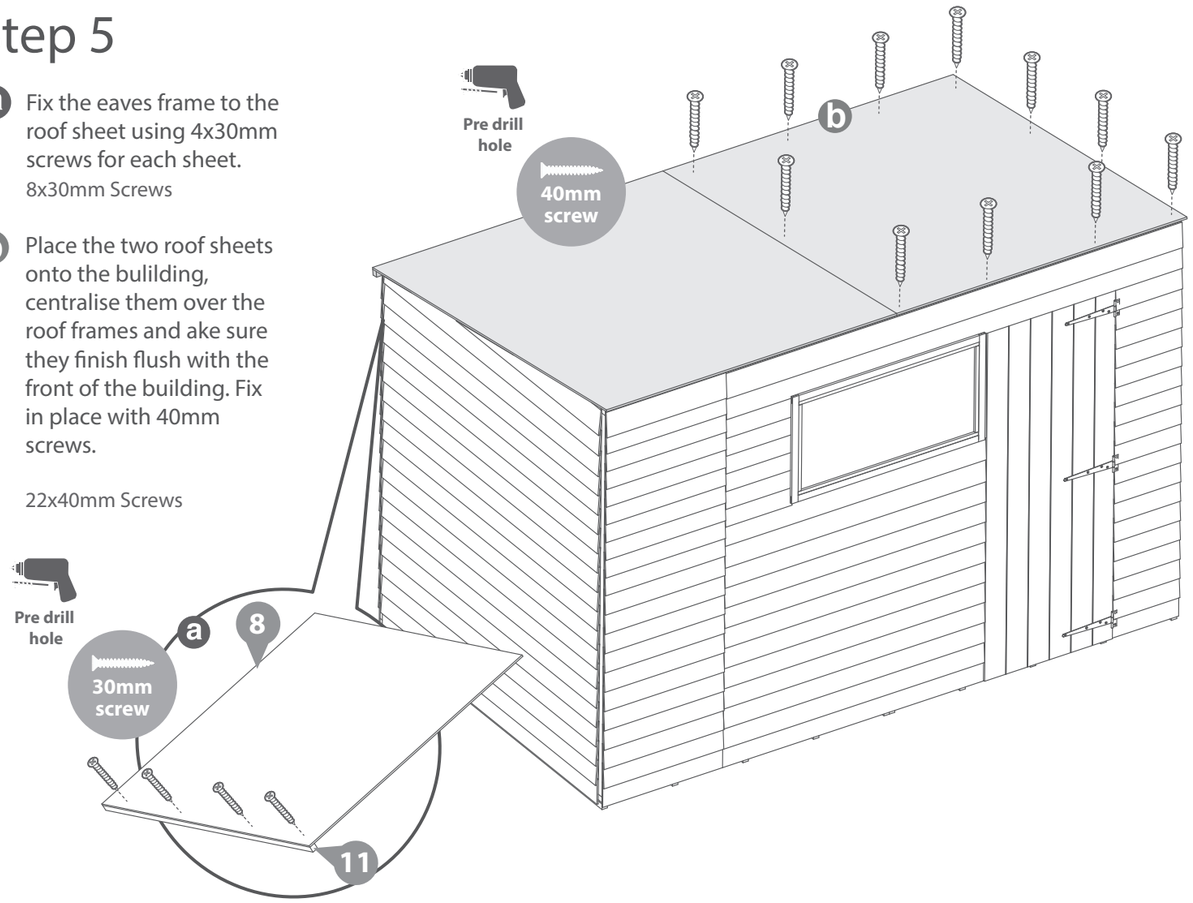

Step 6

b Once the roof is fixed attach the building to the floor with 50 mm screws.

20x 50mm Screws

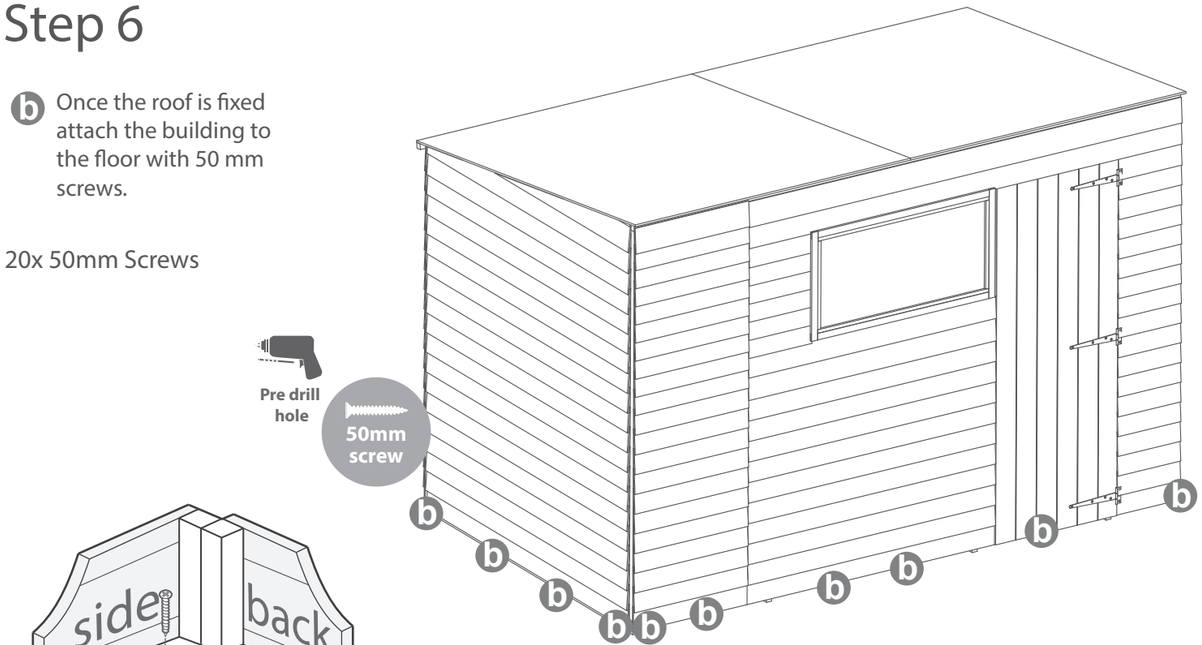

Step 7

Cut the felt into 2x 3104mm long sheets and lay onto roof as shown in diagram ensuring there is overhang around the sides.

100x felt tacks

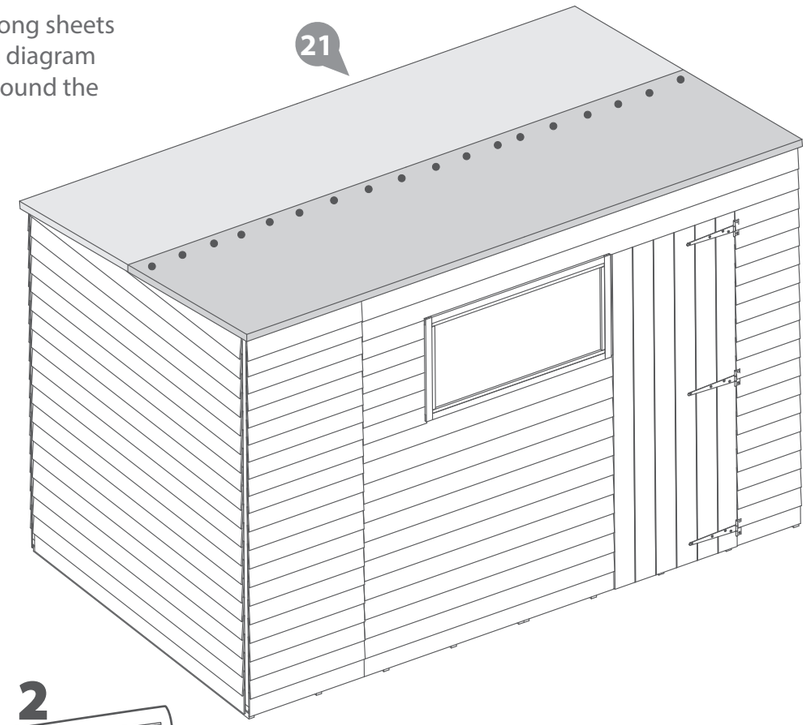

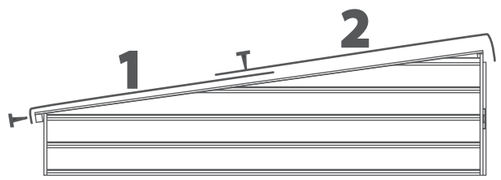

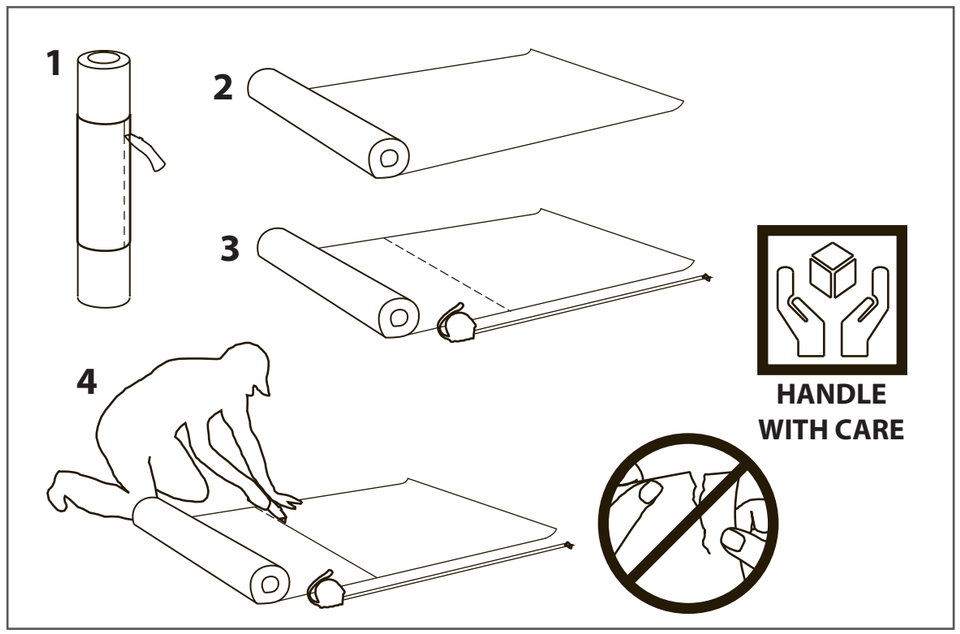

Step 8

Fit the Cover Trims to the left and right of the building and over the panel joins as shown in the illustration using 30mm screws. Trim the length of the cover trims to the required size before fitting if necessary. Pre drill to avoid splitting.

18x30mm Screws

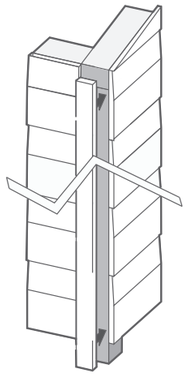

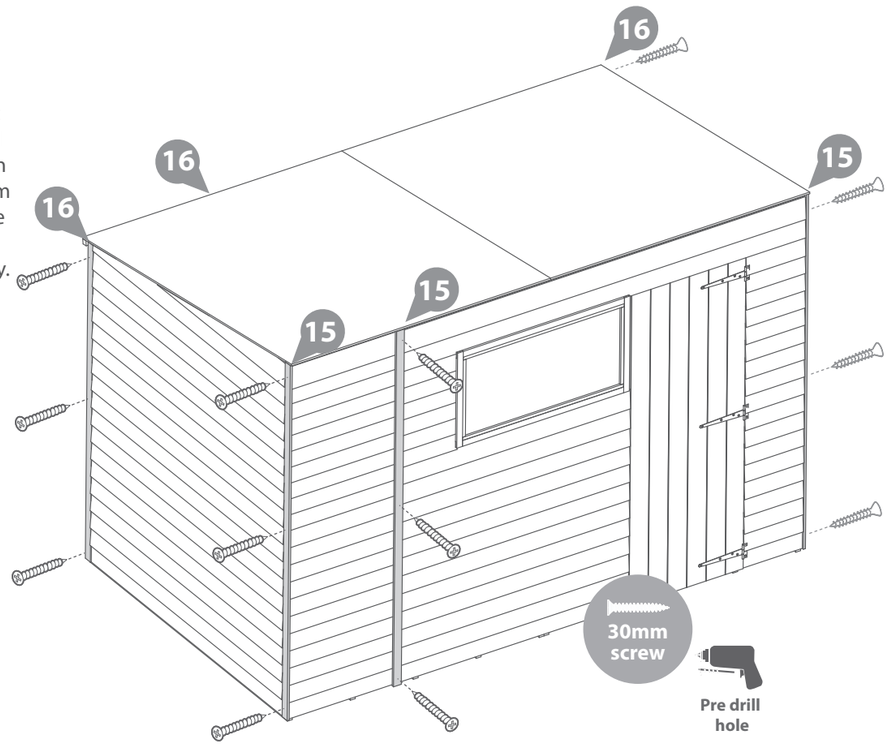

Step 9

Attach the fascias to the roof leaving a slight overhang at the top.

Fit the fascias to the roof over the felt and secure in place with 40mm screws as shown.
Pre drill to avoid splitting.

12x40mm Screws

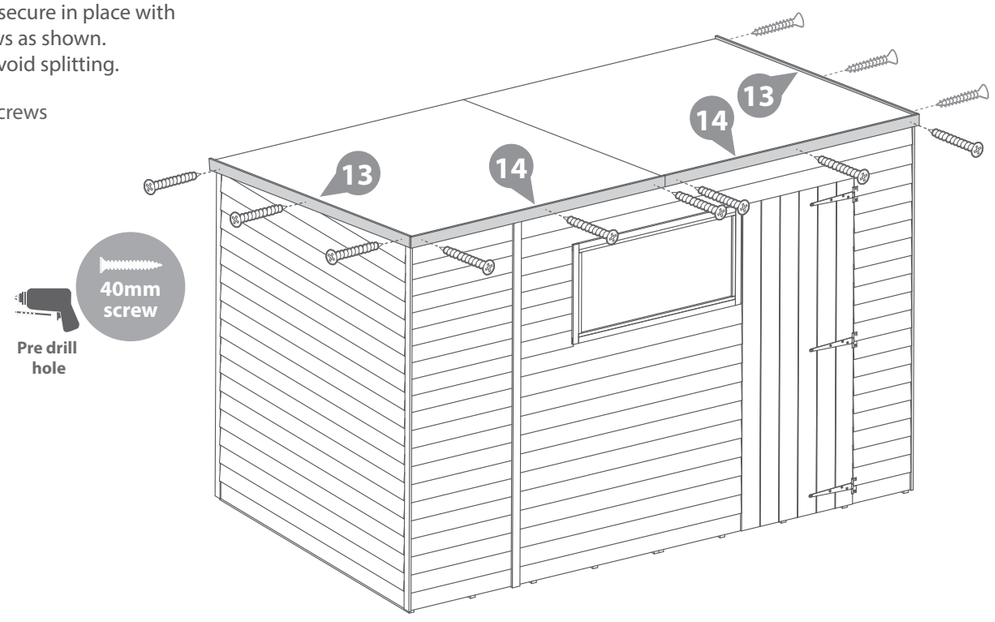

Step 10

Use 4x30mm screws to fix each beading strip onto the door panel. Ensure that the screw is parallel with the door frame when fixing the strip to the door panel as shown in the close up view.

Line up the door block as shown in the illustration. Then fix with 2x30mm screws by screwing through the outside of the door into the block.

10x30mm Screws

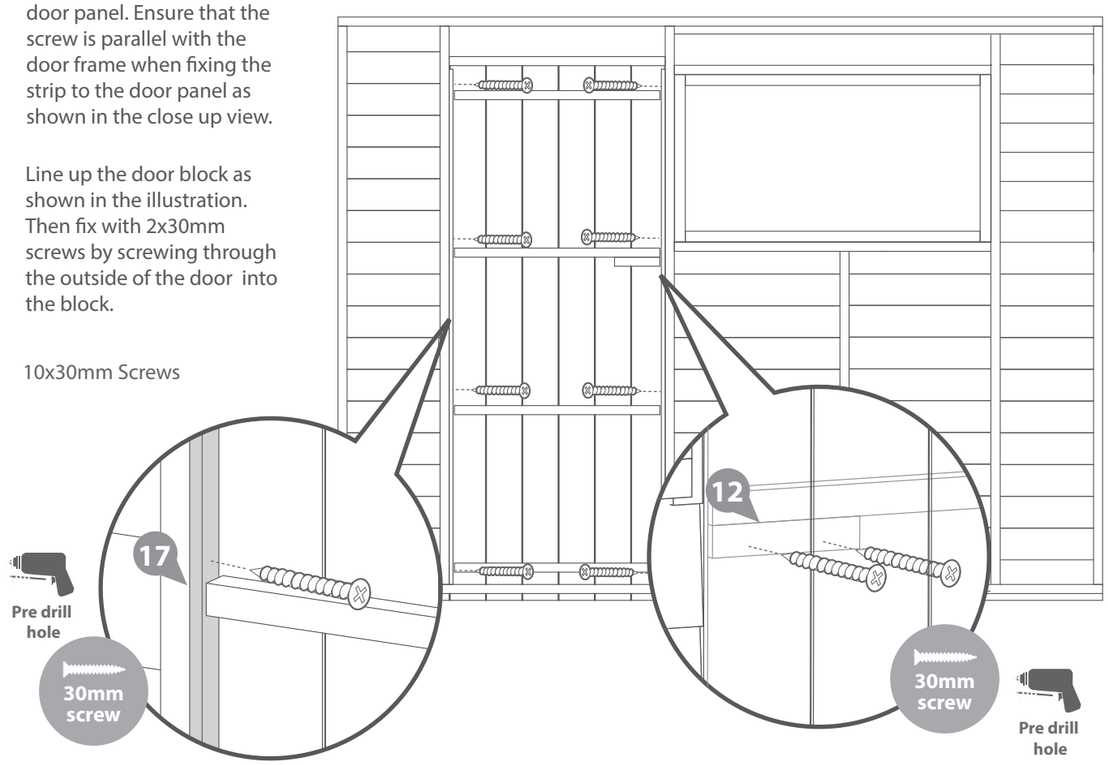

Step 11

Fix the pad bolt with 6x30mm screws to the horizontal brace on the door. Then fix the pad bolt retainer to the door panel framing using 4x30mm screws.

Fix the turn buttons using 1x30mm black screw per turn button.

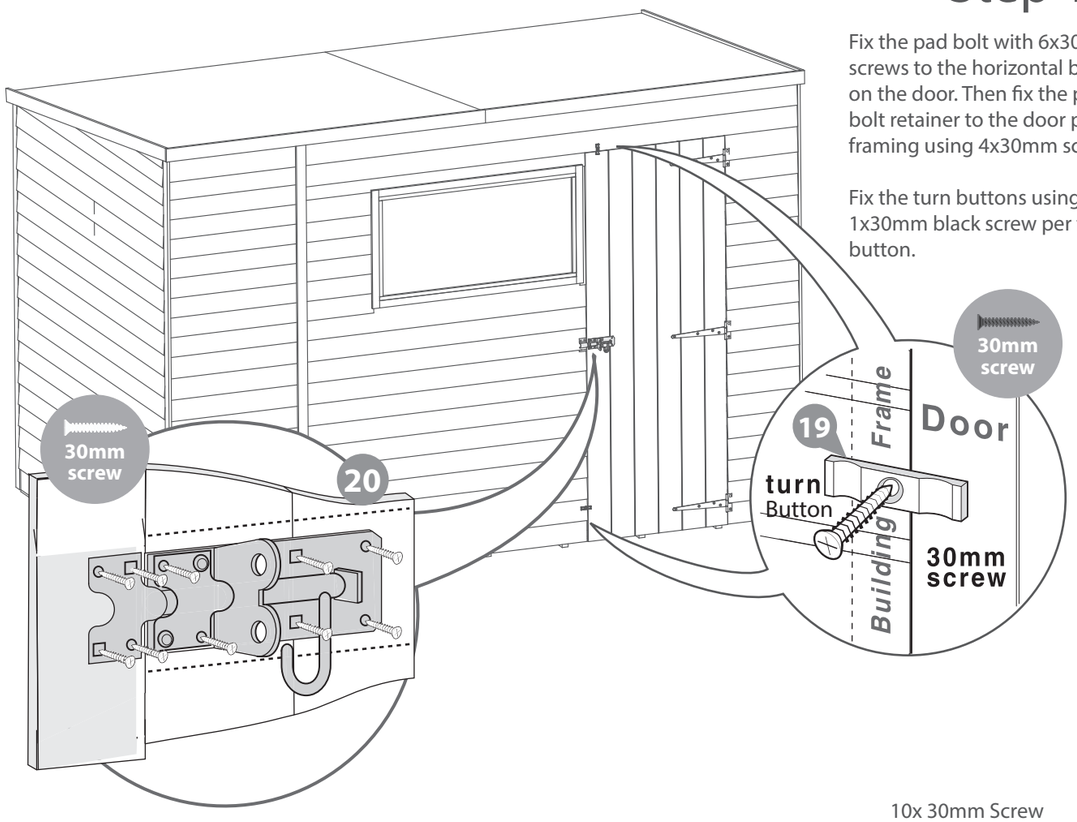
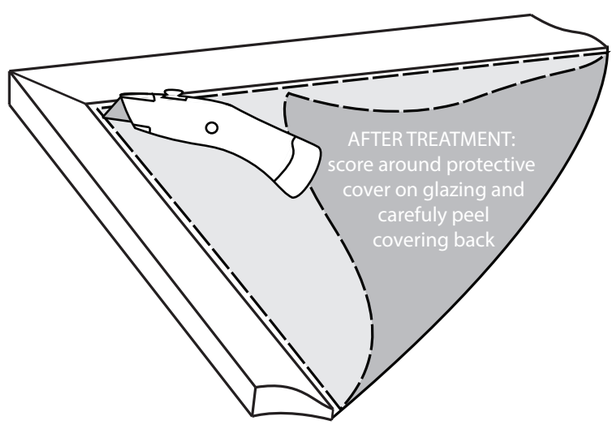
10x 30mm Screw
2x 30mm Black Screw